THIS DRAWING IS UNPUBLISHED. RELEASED FOR PUBLICATION 2004
© COPYRIGHT 2004 BY - ALL RIGHTS RESERVED.

LOC	DIST
AD	00

REVISIONS

P	LTR	DESCRIPTION	DATE	DWN	APVD
	A	REV PER ECO-11-007577	13APR2011	RKC	JE

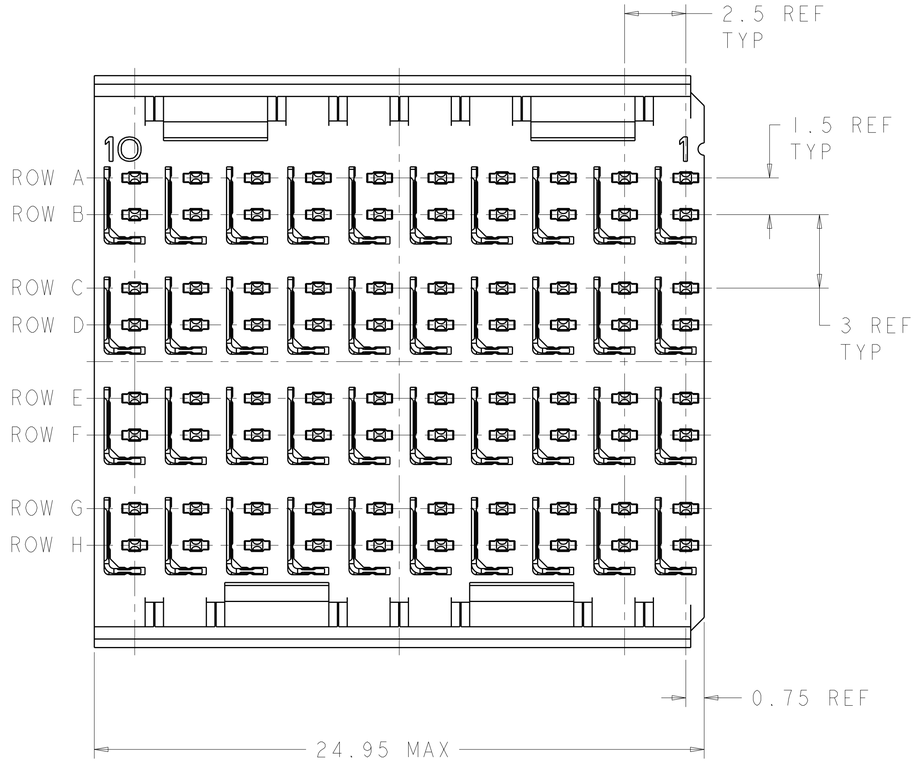

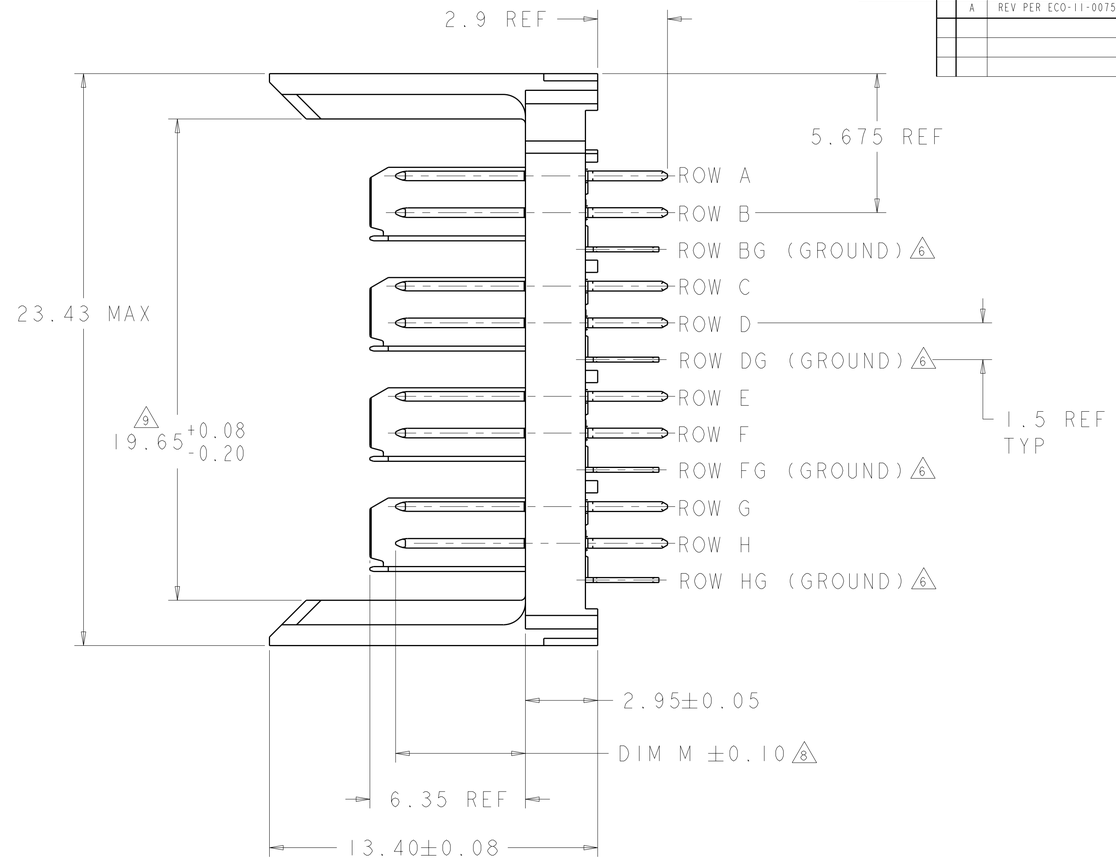

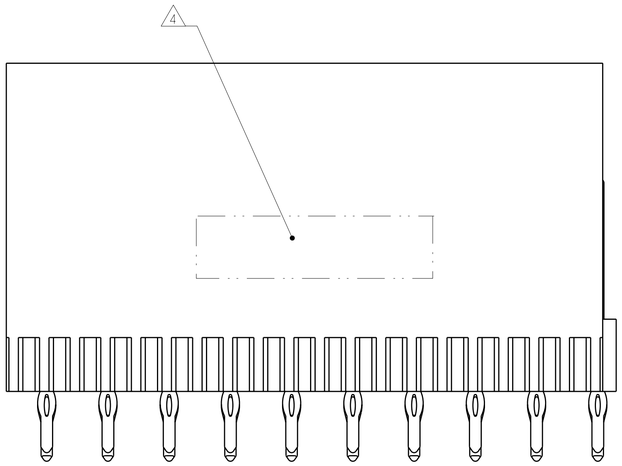

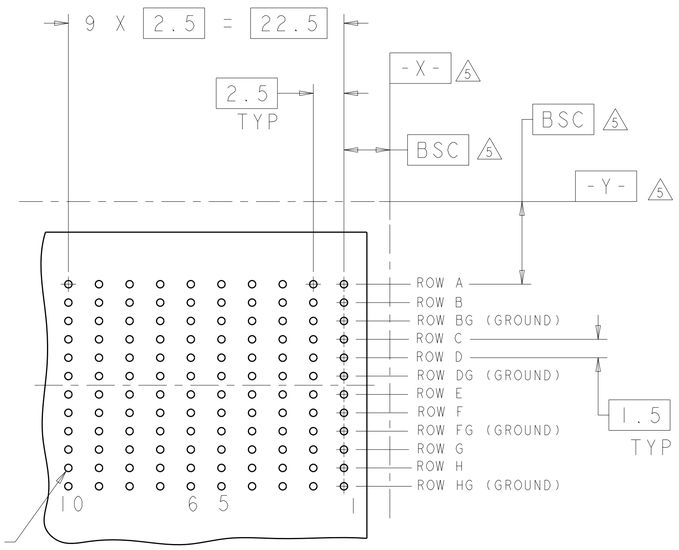

1 ⌖ Ø0.05Ⓢ X Y
ALL PLATED THRU HOLES

RECOMMENDED PC BOARD LAYOUT, BACKPLANE, COMPONENT SIDE SHOWN
SCALE 4:1

1. REFERENCE APPLICATION SPEC 114-13059 FOR RECOMMENDED PLATED THRU HOLE DIAMETER AND PLATING THICKNESSES.
2. MATERIAL:
   CONTACT AND SHIELD - PHOSPHOR BRONZE
   HOUSING - GLASS FILLED POLYESTER. UL 94V-0.
3. FINISH: SIGNAL AND GROUND CONTACTS:
   MATING AREA: MEETS THE PERFORMANCE REQUIREMENTS OF PRODUCT SPECIFICATION 108-2055; BASED ON TELCORDIA GR-1217-CORE, APPLICATIONS IN UNCONTROLLED ENVIRONMENTS
   COMPLIANT PIN AREA: 0.5 µm MIN MATTE TIN OVER BASE PLATING
4. CONNECTOR MARKED WITH PART NUMBER AND DATE CODE.
5. DATUMS AND BASIC DIMENSIONS ESTABLISHED BY CUSTOMER.
6. THE FOUR GROUNDS IN EACH COLUMN ARE COMMONED.
7. CONTACT AREA LUBRICATED WITH BELLCORE APPROVED LUBRICANT. TECHNICAL REFERANCE: GR-1217-CORE, ISSUE 1, NOVEMBER 1995.
8. REFER TO "CONTACT LAYOUT" CHART FOR SEQUENCING.
9. DIMENSION APPLIES TO FIRST AND LAST CIRCUITS.

CONTACT LAYOUT

A = 3.80mm (DIM M)
B = 5.30mm (DIM M)
G = GROUND

ROWS	COLUMNS 10	9	8	7	6	5	4	3	2	1
A	B	B	B	B	B	B	B	B	B	B
B	B	B	B	B	B	B	B	B	B	B
BG	G	G	G	G	G	G	G	G	G	G
C	A	B	B	B	B	B	B	B	B	B
D	A	B	B	B	B	B	B	B	B	B
DG	G	G	G	G	G	G	G	G	G	G
E	B	B	B	B	B	B	B	B	B	B
F	B	B	B	B	B	B	B	B	B	B
FG	G	G	G	G	G	G	G	G	G	G
G	B	B	B	B	B	B	B	B	B	B
H	B	B	B	B	B	B	B	B	B	B
HG	G	G	G	G	G	G	G	G	G	G

4805 (3/11)

Pro/ENGINEER DRAWING

6469292-1
PART NUMBER

THIS DRAWING IS A CONTROLLED DOCUMENT.

DIMENSIONS: mm

TOLERANCES UNLESS OTHERWISE SPECIFIED:
0 PLC ±-
1 PLC ±-
2 PLC ±-
3 PLC ±-
4 PLC ±-
ANGLES ±-

MATERIAL - 2
FINISH - 3

DWN S. J. MAGARO 25JUL2004
CHK R. A. PATTERSON 25JUL2004
APVD R. PATTERSON 16AUG2007
PRODUCT SPEC -
APPLICATION SPEC -
WEIGHT -

TE Connectivity

NAME HEADER ASSEMBLY, 4 PAIR, SELECTIVELY LOADED, 2.5mm TAIL, 25mm HMZd

SIZE A1 | CAGE CODE 00779 | DRAWING NO C-6469292 | RESTRICTED TO -

CUSTOMER DRAWING | SCALE 8:1 | SHEET 1 OF 1 | REV A